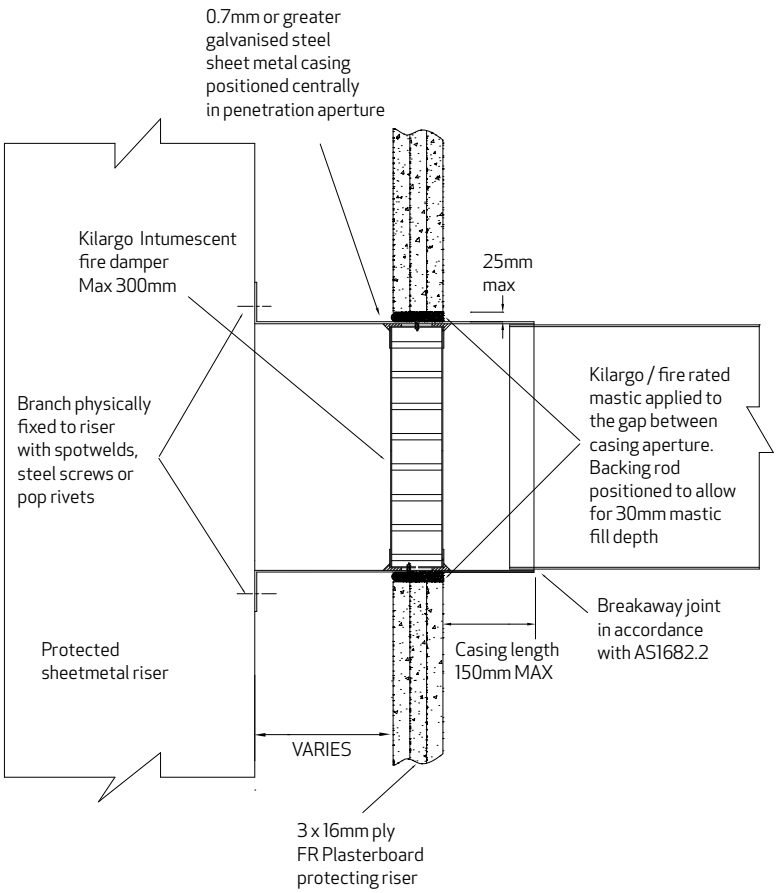

Installation Instructions

Circular damper mounted within riser branch penetrating 16mm plasterboard (angle free)

Note: Angle free system must comply with all features of this system drawing

1. Position and fix damper into ductwork with steel screws - ensuring that the damper will be aligned and within the fire separating shaft wall once the duct is attached to the riser. Seal internal gap between damper and duct with Kilargo Intumescent Mastic.
2. Mechanically connect duct to riser with steel screws or steel pop rivets.
3. Once protective shaftwall has been constructed, firestop gaps between the duct and shaftwall with Kilargo Intumescent Mastic (supplied separately). Ensure fill depth corresponds with those detailed in the System Drawing. Note: A maximum perimeter clearance of 25mm applies. If required use fire rated backing rod, positioned to control fill depth.
4. When connecting ductwork, ensure that an appropriate AS1682.2 compliant breakaway joint method is used.
5. Ensure convenient access is provided for visual inspection and cleaning as necessary.
6. Ensure product and certification labels are in a prominent position for easy identification during subsequent maintenance inspections.

Notes

1. Product must be fitted in accordance with this detail, including the use of Kilargo Intumescent Mastic to ensure compliance with Kilargo Fire Test Approval detailed.
2. Fixing screws are to be supplied by others.

Kilargo

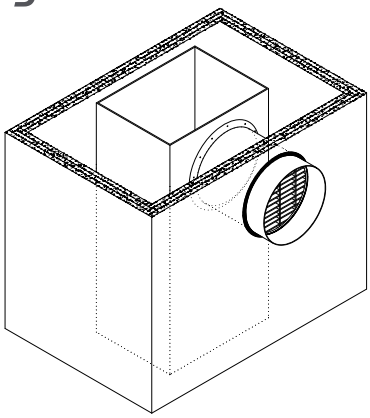

Building Element	16mm FR Plasterboard x 3 layers
Application	Mounted in riser branch (angle free system)
Maximum Size	300mm diameter
FRL	-/120/-
Test Reference No.	CSIRO FC02455
System No.	**WSW6**

Kilargo